BINAME

TECHNICAL DRAWING

Dimensions in mm

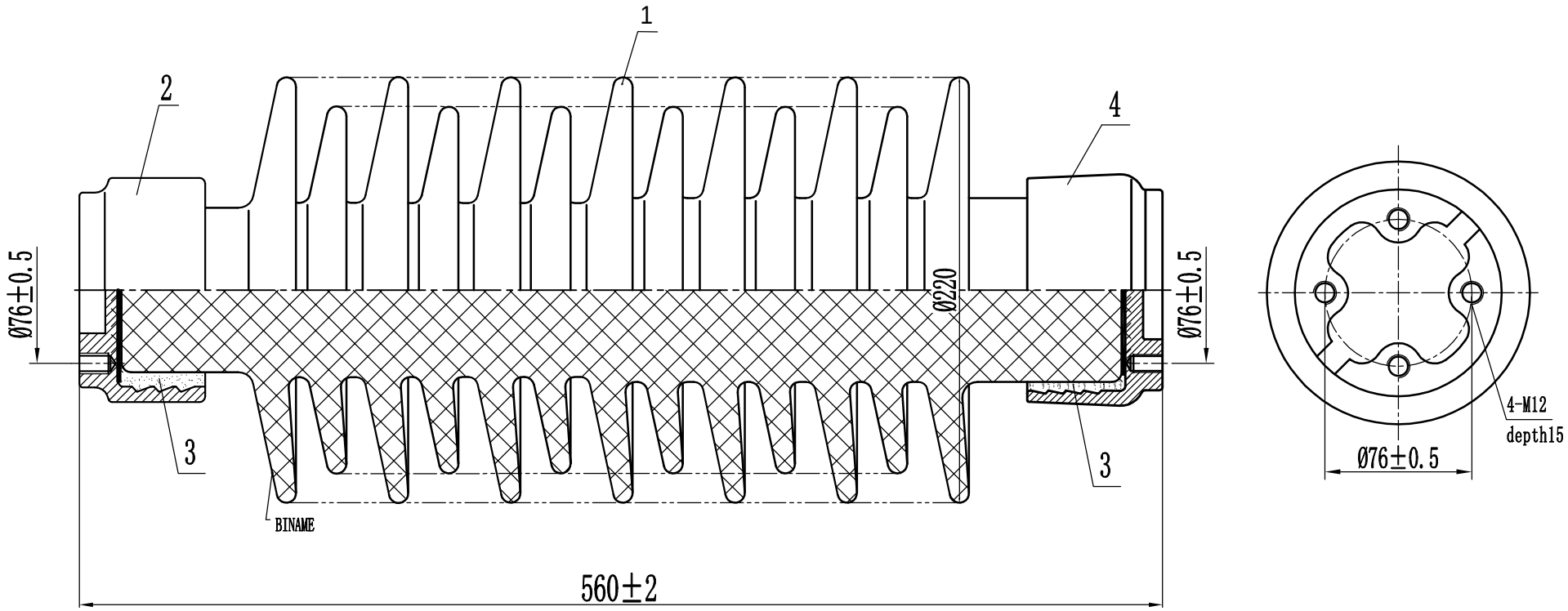

TECHNICAL REQUIREMENTS

1. Colour: brown.
2. Minimum creepage distance: 1620 mm.
3. Ultimate cantilever strength: 4 kN.
   Ultimate torsional strength: 1.8 kN.m.
4. Impulse withstand voltage: 250 kV.
   Wet S.I. withstand voltage: 95 kV.
5. All metal fittings: high-strength ductile iron,
   hot-dip galvanized.
6. Porcelain: C120. Portland cement; sealed with silicone.
7. Cushioning protective layer (gasket): asphalt paper.
8. Applicable standards: IEC 60168 and IEC 60273.

Item	Description	Qty	Material	Finish / notes
4	Bottom flange	1	QT450	HDG
3	Cement	1	P.O. 52.5	
2	Top flange	1	QT450	HDG
1	Insulator	1	C120	

C4-250-IV Outdoor solid-core post insulator Anti-pollution type - Assembly		DRAWING No. **55209**
Mass: 23.5 kg	Scale: 1:3	Sheet: 1 / 1
BINAME bv	www.biname.be | info@biname.be	