BINAME

PORCELAIN STATION POST INSULATOR

OUTDOOR SOLID-CORE / ANTI-POLLUTION TYPE

C8-650-IV

Dimensions in mm

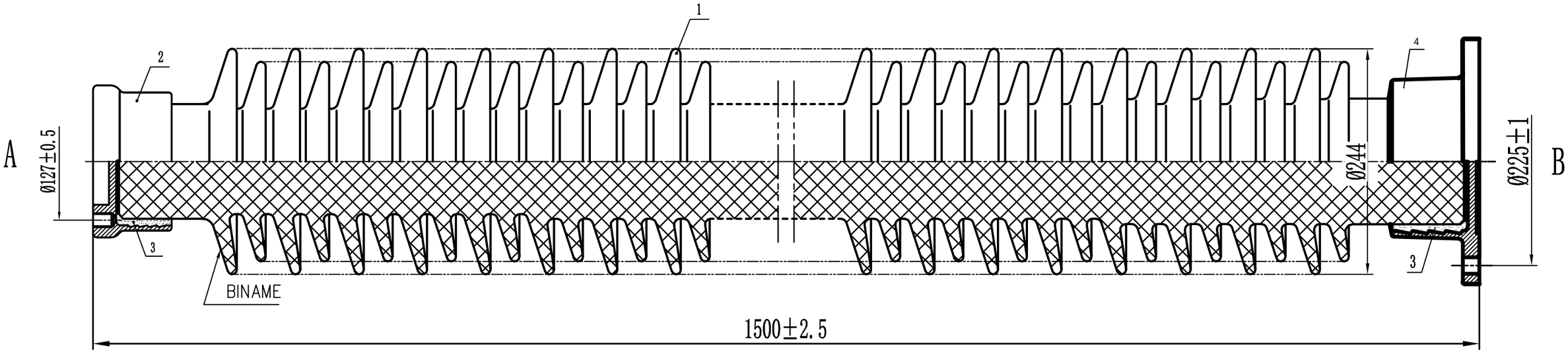

TECHNICAL REQUIREMENTS

1. **Colour**
   Brown glaze.
2. **Creepage distance**
   Minimum 4,495 mm.
3. **Ultimate mechanical strengths**
   Cantilever: 8 kN.
   Torsion: 4 kN·m.
4. **Electrical withstand voltages**
   Impulse withstand voltage: 650 kV.
   Wet s.i. withstand voltage: 275 kV.
5. **Metal fittings**
   High-strength ductile iron, hot-dip galvanized.
6. **Insulating body and assembly**
   C120 porcelain and Portland cement; sealed with silicone.
7. **Protective cushioning layer (gasket)**
   Asphalt paper.
8. **Applicable standards**
   IEC 60168 and IEC 60273.

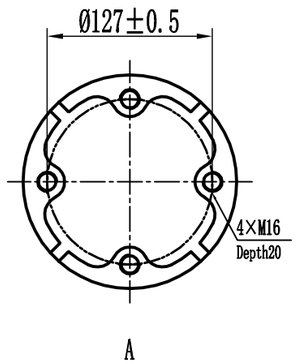

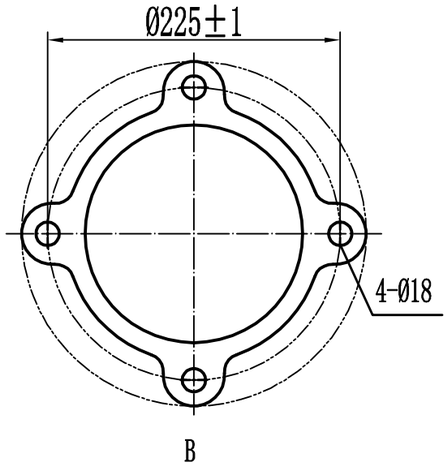

PARTS LIST

Item	Description	Qty	Material	Finish
4	Bottom flange	1	QT450	HDG
3	Cementing	2	P.O. 52.5	-
2	Top flange	1	QT450	HDG
1	Porcelain body	1	C120	Brown glaze

HDG: hot-dip galvanized.

BINAME	DRAWING No. / MODEL	ASSEMBLY MASS	SCALE	SOURCE DRAWING DATE	FORMAT / SHEET
	57227G / C8-650-IV	**96 kg**	Not to scale	09 May 2026	A3 / 1 of 1